Calavera del Musico
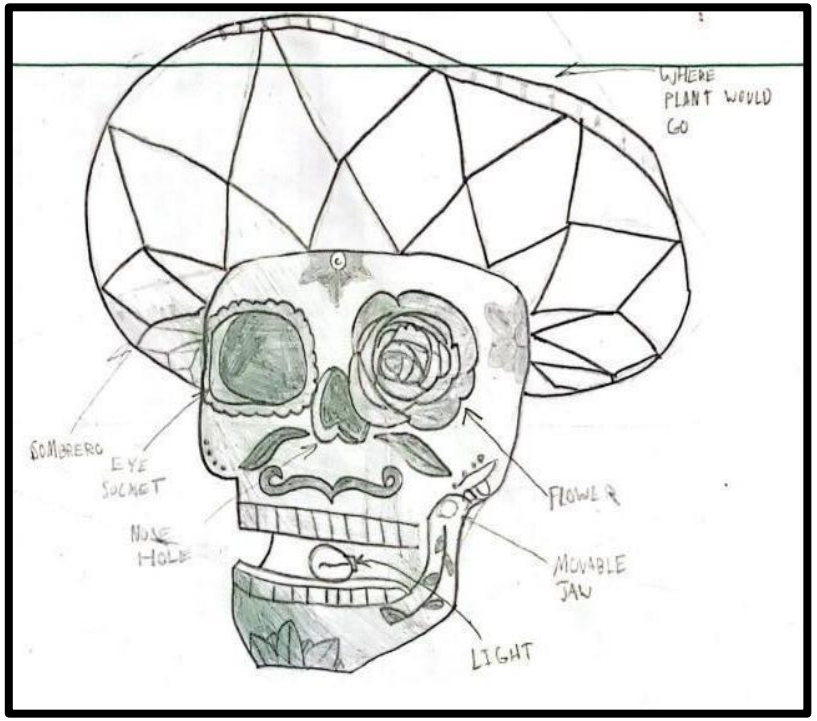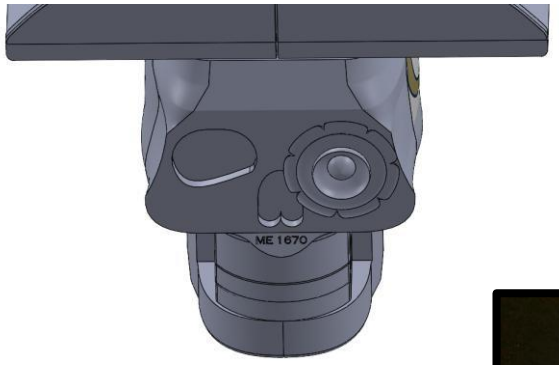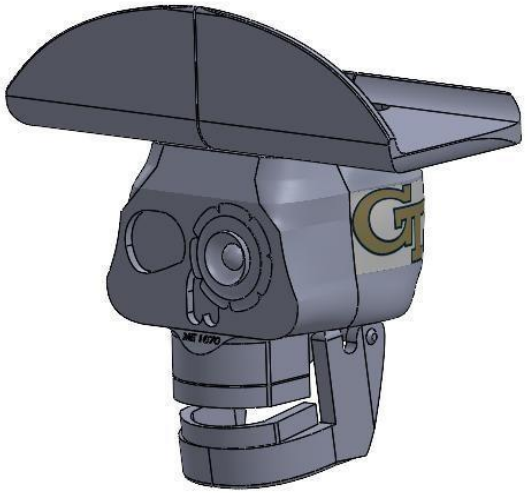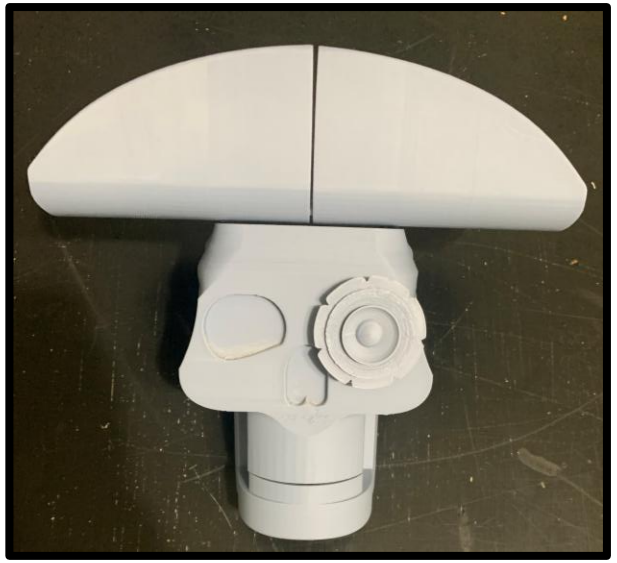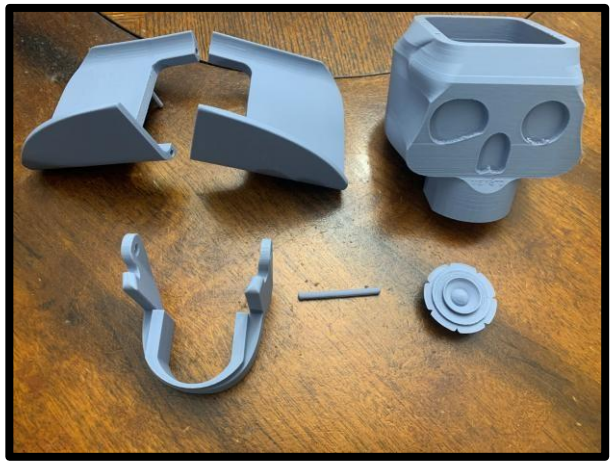
Mexican Culture